MarineTown	MAGNETIC SWIVEL DOOR STOP 30*15 NORTH	DATE	DRAWN	CHKD	SCALE	DRAWING NUMBER
		11MAY2023	WSH	P.L	1:1	J-1207463P

REV	DATE	DRAWN/CHKD	DESCRIPTION	PART NUMBER	MATERIAL	FINISH
				1207463P	XXXXX	XXXXX

MILLIMETERS

ALL DIMENSIONS WITHOUT TOLERANCES ARE FOR REFERENCE ONLY.

THIRD ANGLE PROJECTION
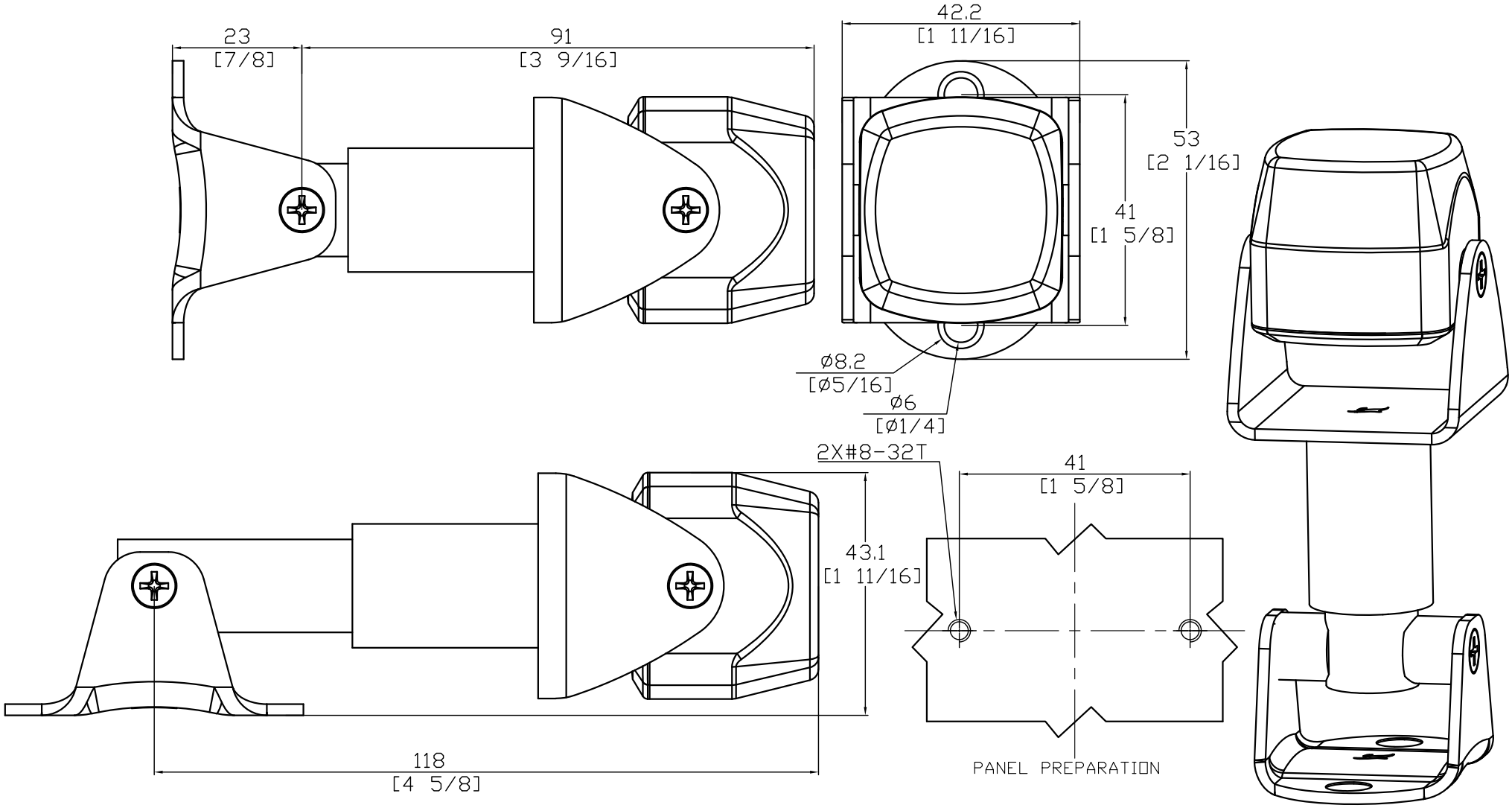
A4 PAPER SIZE