Marine Town	XXXXXXXXXXXX	DATE	DRAWN	CHKD	SCALE	DRAWING NUMBER
		28OCT2021	LZB	P.L	1:3	J-8929207

REV	DATE	DRAWN/CHKD	DESCRIPTION	PART NUMBER	MATERIAL	FINISH
				8929207	XXXXX	XXXXX

MILLIMETERS

ALL DIMENSIONS WITHOUT TOLERANCES ARE FOR REFERENCE ONLY.

THIRD ANGLE PROJECTION

A4 PAPER SIZE

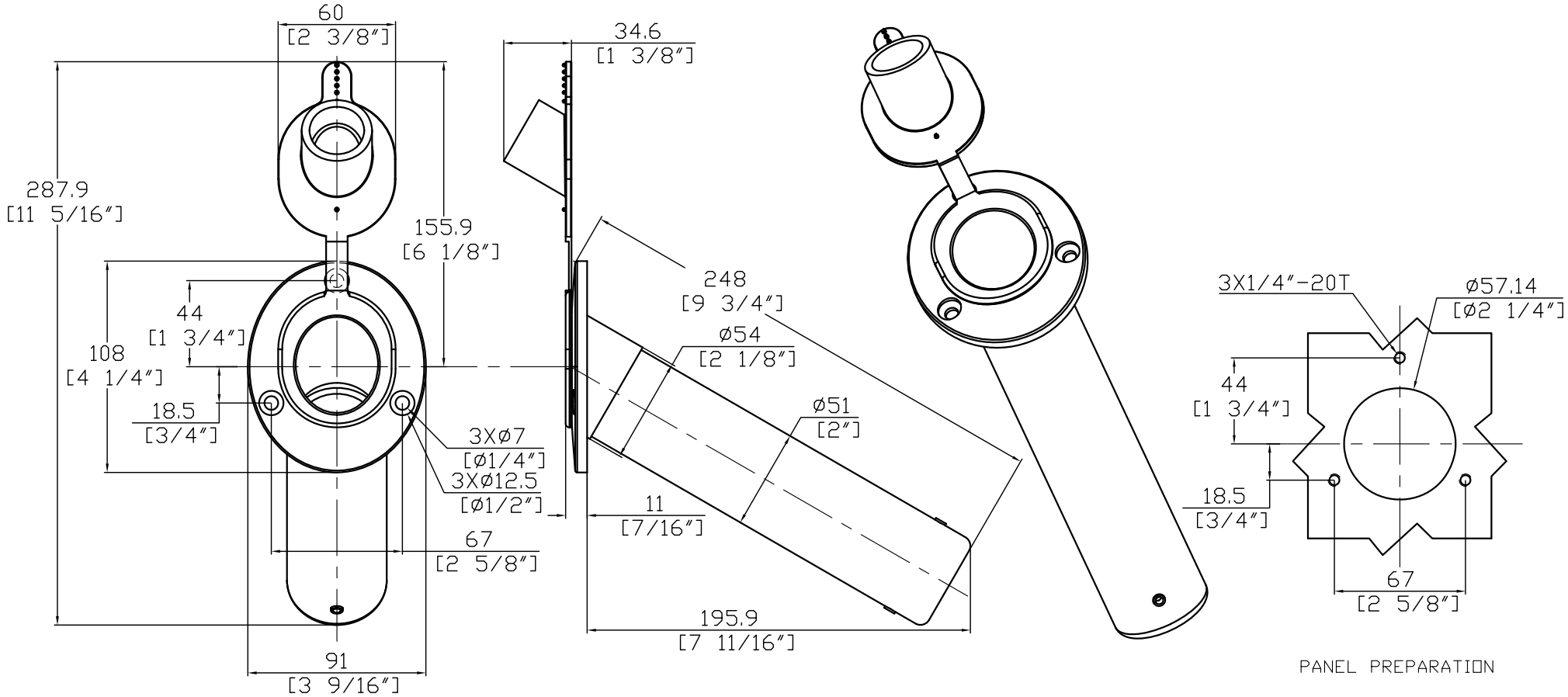

PANEL PREPARATION

CONFIDENTIALITY NOTICE: The information contained in this document unless otherwise stated is privileged and confidential information and is intended for the use of the individual or company that have been specifically authorized to receive it. If you are not the intended recipient, and or if you are not under a confidentiality agreement with the Marine Town Inc., you are hereby notified that any use of the information herein by you or any dissemination, distribution or copying of this document or its content is strictly prohibited, failure to notify sender to the contrary within ten days constitutes agreement to these terms. If you have received this document in error, please delete it and notify Marine Town immediately at 886-2-2957-9880 or info@marinetown.com.tw.